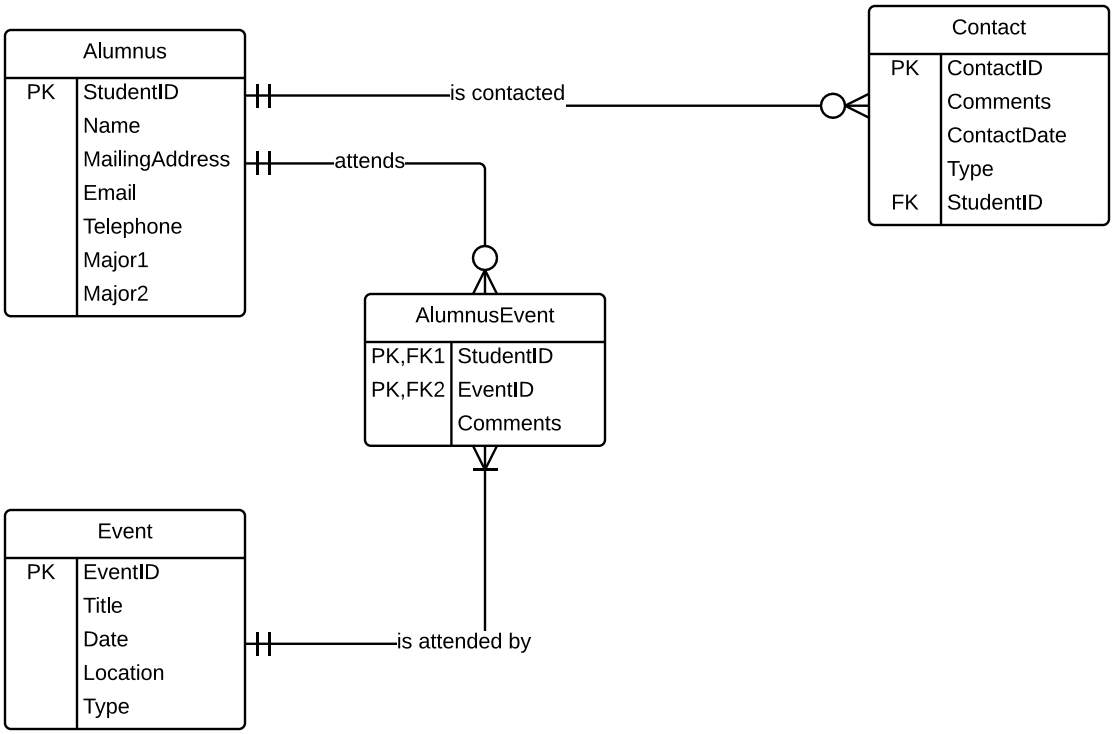
Alumnus
PK StudentID
Name
MailingAddress
Email
Telephone
Major1
Major2
is contacted
Contact
PK ContactID
Comments
ContactDate
Type
FK StudentID
attends
AlumnusEvent
PK,FK1 StudentID
PK,FK2 EventID
Comments
Event
PK EventID
Title
Date
Location
Type
is attended by